THIS DRAWING IS UNPUBLISHED. RELEASED FOR PUBLICATION -,- .
© COPYRIGHT - By - ALL RIGHTS RESERVED.

LOC	DIST
AJ	16

REVISIONS

P	LTR	DESCRIPTION	DATE	DWN	APVD
	B1	REVISED PER ECO-11-005030	11MAR11	RK	HMR

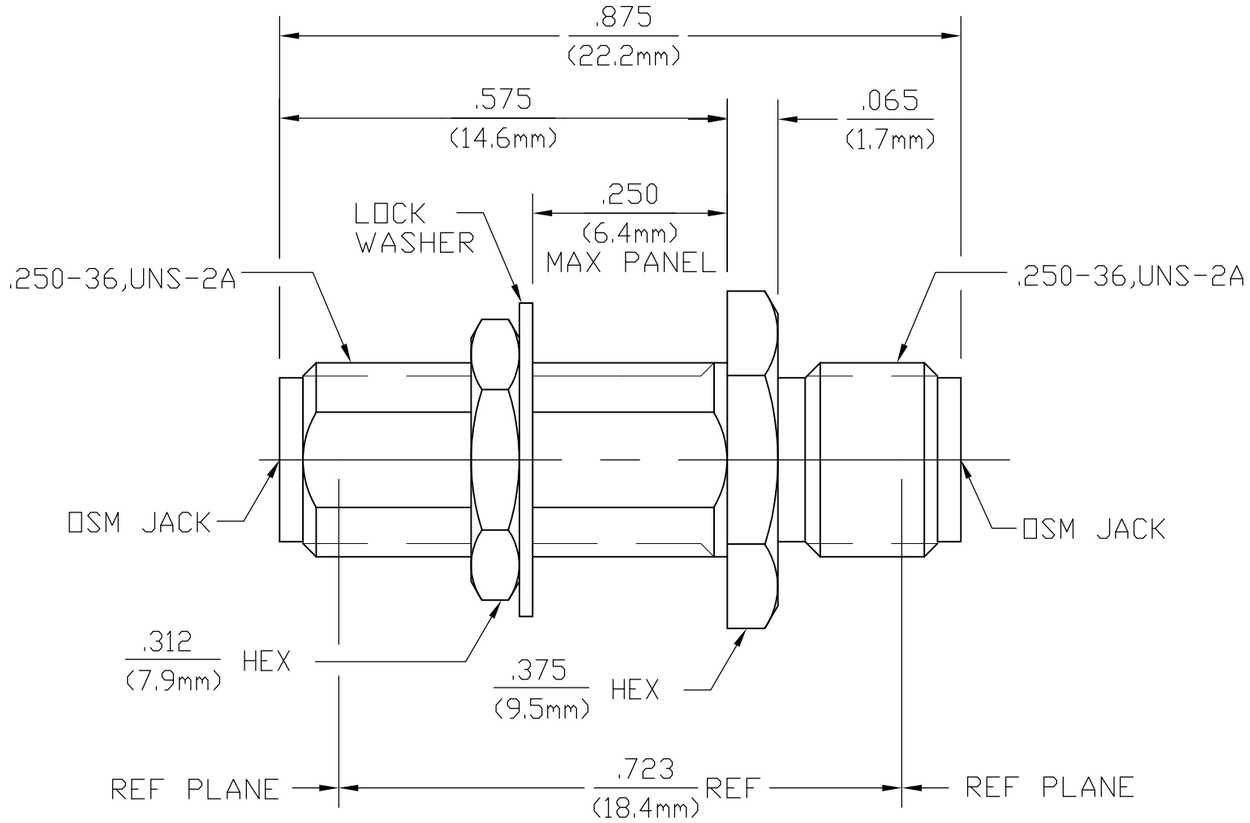

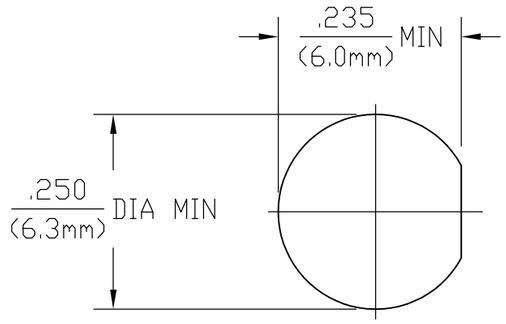

RECOMMENDED
MOUNTING HOLE

ELECTRICAL	MECHANICAL	ENVIRONMENTAL
Nominal Impedance (Ohms) 50	Interface Dimensions MIL-STD-348A,	TEMPERATURE RATING -65°C TO +125°C
Frequency Range (GHz) DC to 18	Fig. 310.2 BOTH ENDS	Vibration MIL-STD-202, Method
Volt Rating (VRMS MAX)	Recommended Mating	204, Condition D.
@ Sea Level 335	Torque N/A	Shock MIL-STD-202, Method 213,
VSWR 1.05 +.005	Mating Characteristics:	Condition I.
Insertion Loss (dB MAX) .03 $\sqrt{f(GHz)}$	Insertion (MAX Lbs) 3.0	Thermal Shock MIL-STD-202,
RF Leakage (dB MIN) 60 @ 2 to 3 GHz	Withdrawal (MIN Oz) 1.0	Method 107, Condition C, except
Corona, 70,000 Ft (VRMS MIN) 250	Force to Engage and	HIGH TEMP SHALL BE +115°C.
Dielectric Withstanding Voltage	Disengage (In-Lbs MAX) 2.0	Moisture Resistance MIL-STD-202,
(VRMS MIN) @ Sea Level 1,500	Center Contact Captivation	Method 106
Contact Resistance (Milliohms MAX)	Axial (Lbs) 6.0	Corrosion - MIL-STD-202, Method
Center Contact 4.0	Radial (In-Oz) 4.0	101, Condition B, 5% salt spray
Outer Contact 2.0	Cable Retention	
Cable to Housing N/A	Axial Force (Lbs) N/A	
RF High Potential @ Sea Level	Torque (In-Oz) N/A	
(VRMS MIN @ 5 MHz) 670	Weight (Grams) 3.8	
I.R.(Megohms MIN) 5,000		

COMPONENT	MATERIAL	FINISH
HOUSING	STAINLESS STEEL PER ASTM-A484 AND ASTM-A582, TYPE 303	PASSIVATE PER ASTM-A380
DIELECTRIC	TFE FLUOROCARBON PER ASTM-D-1457	N/A
CENTER CONTACT	BERYLLIUM COPPER PER ASTM B 196, ALLOY C17300, CONDITION H	GOLD PLATE PER MIL-G-45204 OVER COPPER PLATE PER MIL-C-14550

PACKAGING	PART NUMBER
KIT	1054869-3
BULK	1054869-1

THIS DRAWING IS A CONTROLLED DOCUMENT.

DIMENSIONS: INCHES[MM]

TOLERANCES UNLESS OTHERWISE SPECIFIED:
0 PLC ± -
1 PLC ± -
2 PLC ± -
3 PLC ± .005
4 PLC ± -
ANGLES ± 1°

MATERIAL -
FINISH -

DWN E.F.HOYLE 1/25/89
CHK L.ROSS 2/10/89
APVD 2/22/89
PRODUCT SPEC —
APPLICATION SPEC —
WEIGHT —

TE Connectivity

NAME
OSM BULKHEAD FEEDTHROUGH
JACK TO JACK ADAPTER

SIZE	CAGE CODE	DRAWING NO	RESTRICTED TO
A3	00779	C-1054869	—

CUSTOMER DRAWING | SCALE 5:1 | SHEET 1 OF 1 | REV B1

1470-19 (3/11)