Inlet nozzle for centrifugal fan and splash proof centrifugal fan

DC

Nozzle mounted in fan inlet side to adjust the flow of introduced air. Material: Steel sheet

Dimensions (unit : mm)

ϕ175mm type

Model : 109-1073 Surface treatment : Electro nickel plating (silver)
: 109-1073H : Cation electropainting (black)

Color

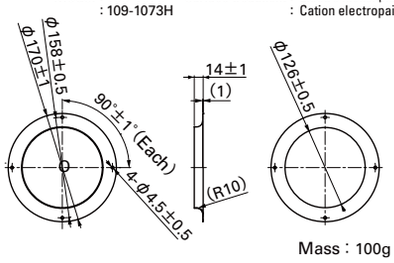

Mass : 100g

Mounting example
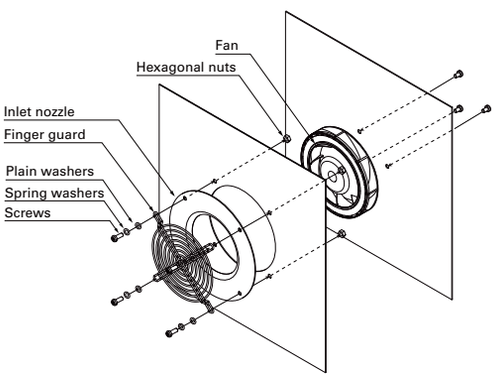
Centrifugal fan