**Features**

* Package in 8mm tape on 7" diameter reels.
* Compatible with automatic placement equipment.
* Compatible with infrared and vapor phase reflow solder process.
* EIA STD package.
* I.C. compatible.

**Package Dimensions**

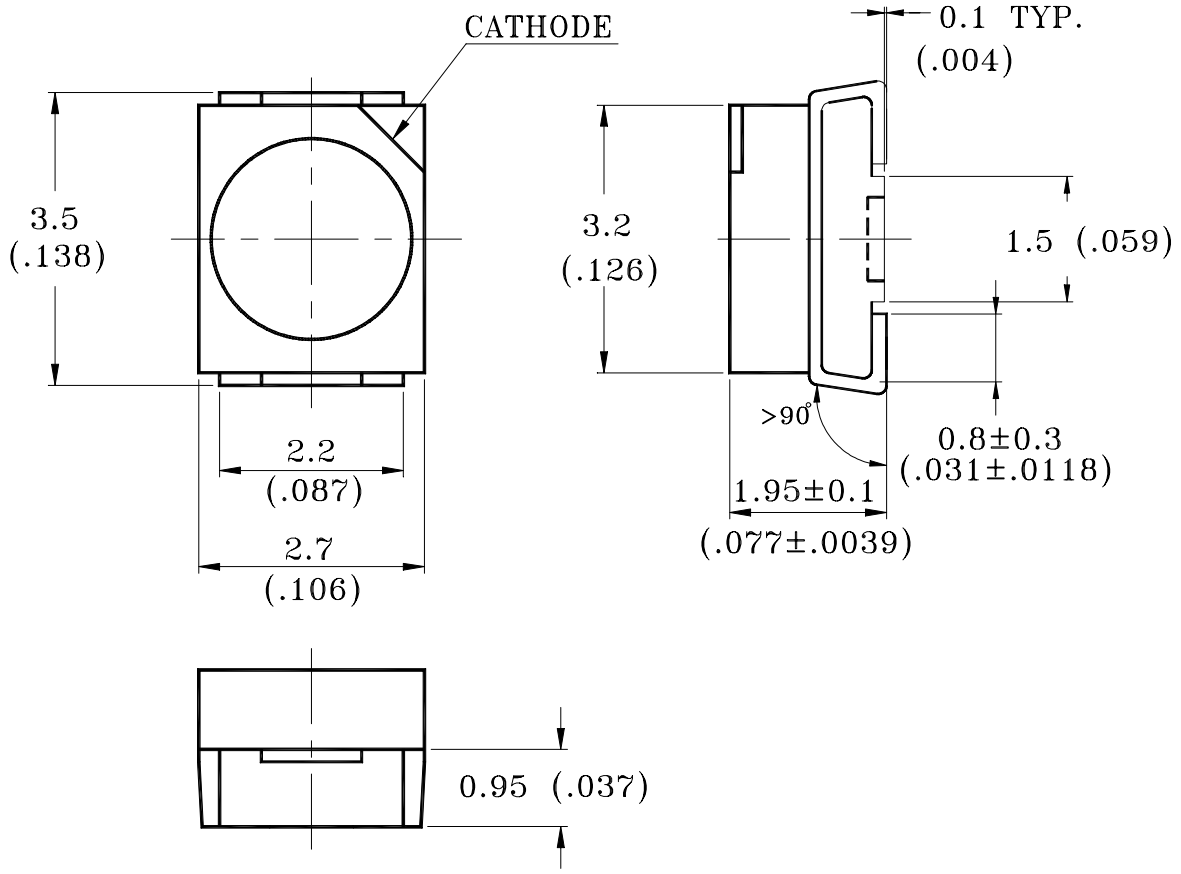


| Part No. | Lens Color | Source Color |
|---|---|---|
| LTST-T670KGKT | Water Clear | AlInGaP Green |

Notes:
1. All dimensions are in millimeters (inches).
2. Tolerance is ±0.2 mm (.008") unless otherwise noted.

**Absolute Maximum Ratings at Ta=25℃**

| Parameter | LTST-T670KGKT | Unit |
|---|---|---|
| Power Dissipation | 75 | mW |
| Peak Forward Current<br>(1/10 Duty Cycle, 0.1ms Pulse Width) | 80 | mA |
| Continuous Forward Current | 30 | mA |
| Derating Linear From 50℃ | 0.4 | mA/℃ |
| Reverse Voltage | 5 | V |
| Operating Temperature Range | -55℃ to + 100℃ | |
| Storage Temperature Range | -55℃ to + 100℃ | |
| Infrared Soldering Cndition | 260℃ For 5 Seconds | |
| Vapor Phase Soldering Condition | 215℃ For 3 Minutes | |
| Wave Soldering Temperature | 260℃ For 5 Seconds | |

Suggest IR Reflow Condition :

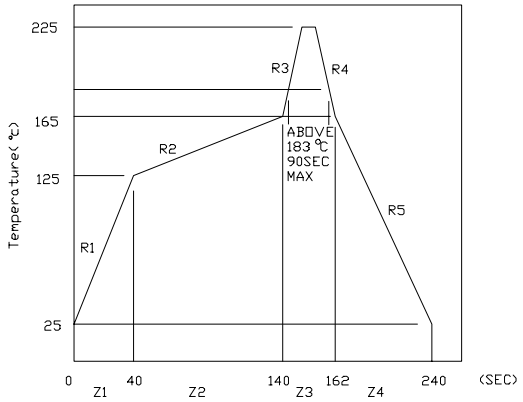

**Electrical / Optical Characteristics at Ta=25℃**

| Parameter | Symbol | Part No. LTST- | Min. | Typ. | Max. | Unit | Test Condition |
|---|---|---|---|---|---|---|---|
| Luminous Intensity | IV | T670KGKT | | 60.0 | | mcd | IF = 20mA Note 1 |
| Viewing Angle | $2\theta_{1/2}$ | T670KGKT | | 120 | | deg | Note 2 (Fig.6) |
| Peak Emission Wavelength | $\lambda P$ | T670KGKT | | 574 | | nm | Measurement @Peak (Fig.1) |
| Dominant Wavelength | $\lambda d$ | T670KGKT | | 571 | | nm | Note 3 |
| Spectral Line Half-Width | $\Delta\lambda$ | T670KGKT | | 15 | | nm | |
| Forward Voltage | VF | T670KGKT | | 2.0 | 2.4 | V | IF = 20mA |
| Reverse Current | IR | T670KGKT | | | 100 | $\mu$A | VR = 5V |
| Capacitance | C | T670KGKT | | 40 | | PF | VF=0, f=1MHZ |

NOTE: 1. Luminous intensity is measured with a light sensor and filter combination that approximates the CIE eye-response curve.

2. $\theta$ 1/2 is the off-axis angle at which the luminous intensity is half the axial luminous intensity.

3. The dominant wavelength, $\lambda$ d is derived from the CIE chromaticity diagram and represents the single wavelength which defines the color of the device.

## Typical Electrical / Optical Characteristics Curves

## (25°C Ambient Temperature Unless Otherwise Noted)

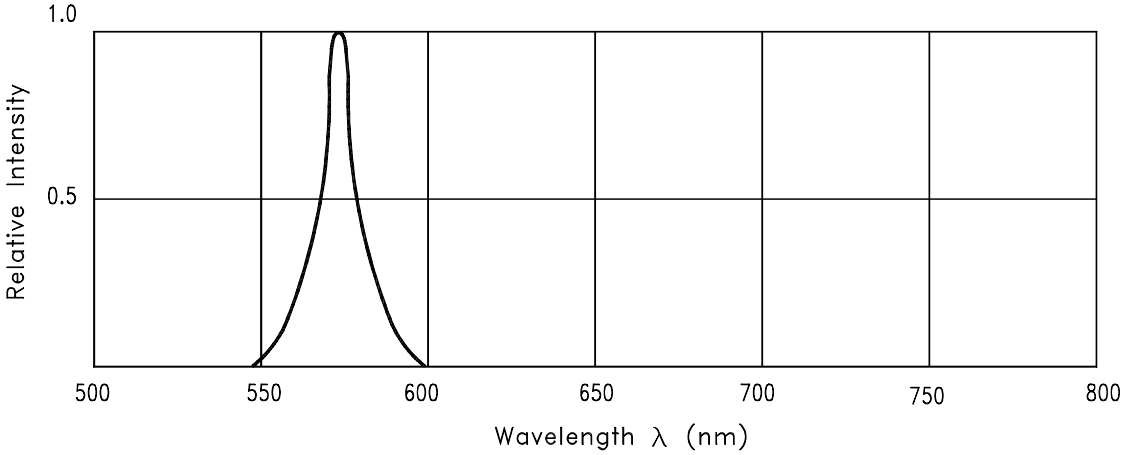


Fig.1 RELATIVE INTENSITY VS. WAVELENGTH

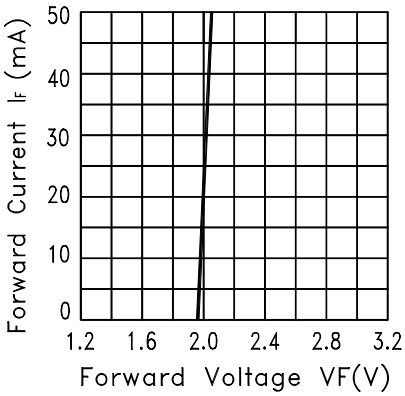


Fig.2 FORWARD CURRENT VS. FORWARD VOLTAGE

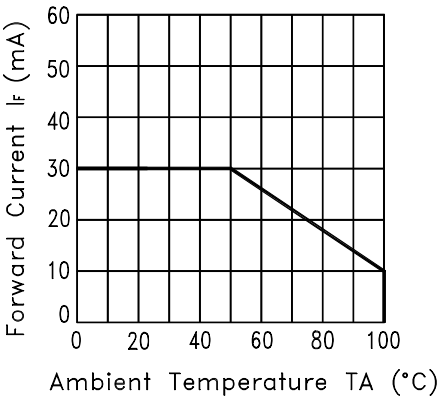


Fig.3 FORWARD CURRENT DERATING CURVE

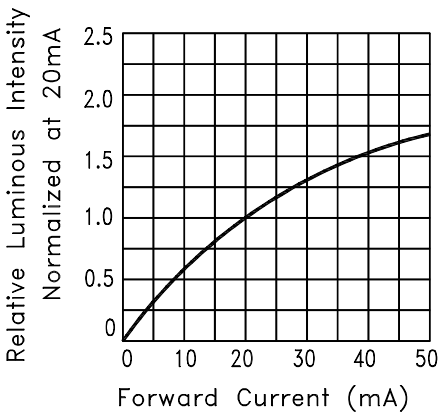


Fig.4 RELATIVE LUMINOUS INTENSITY VS. FORWARD CURRENT

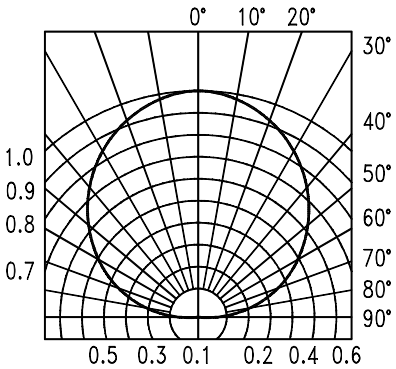


Fig.6 SPATIAL DISTRIBUTION

## User Guide

### Cleaning

Do not use unspecified chemical liquid to clean LED they could harm the package. If cleaning is necessary, immerse the LED in ethyl alcohol or isopropyl alcohol at normal temperature for less one minute.

**Recommend Printed Circuit Board Attachment Pad**

Infrared / vapor phase

Reflow Soldering

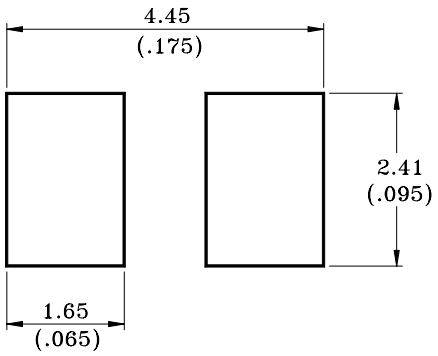


### Package Dimensions of Tape

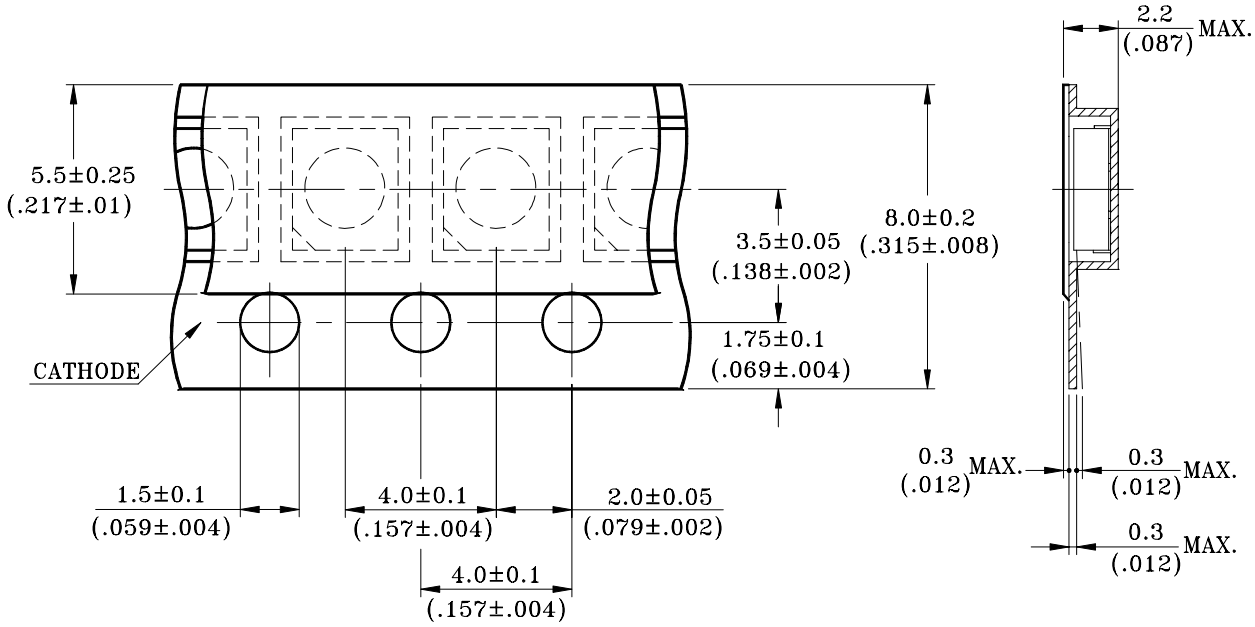


Note:

1.All dimensions are in millimeters (inches).

**Package Dimensions of Reel**

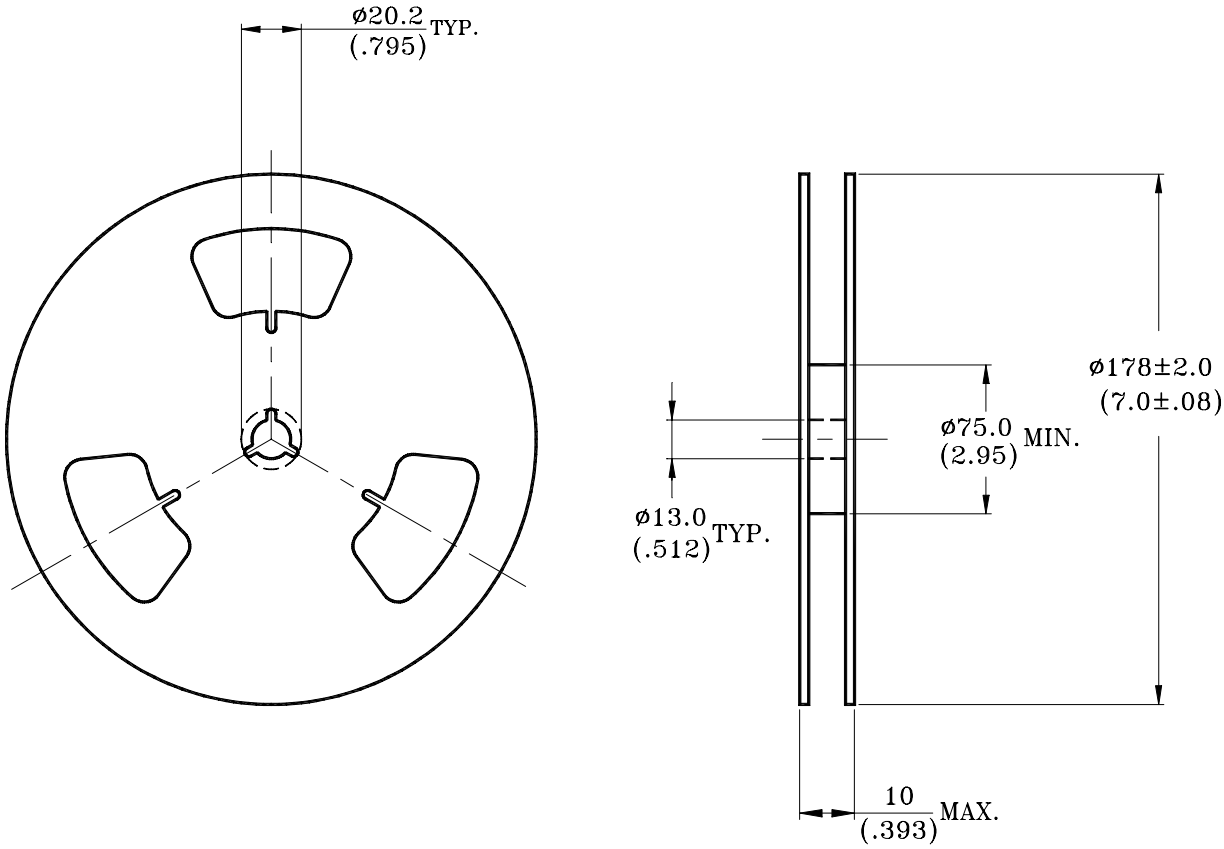


Notes:

1. Empty component pockets sealed with top cover tape.
2. 7 inch reel-2000 pieces per reel.
3. The maximum number of consecutive missing lamps is two.
4. In accordance with ANSI/EIA RS-481 specifications.